R2E175-AC77-15

AC centrifugal fan

backward curved, single inlet

ebm-papst Mulfingen GmbH & Co. KG
Bachmühle 2 · D-74673 Mulfingen
Phone +49 7938 81-0
Fax +49 7938 81-110
info1@de.ebmpapst.com
www.ebmpapst.com

Limited partnership · Headquarters Mulfingen
County court Stuttgart · HRA 590344

General partner Elektrobau Mulfingen GmbH · Headquarters Mulfingen
County court Stuttgart · HRB 590142

Nominal data

Type	**R2E175-AC77-15**
Motor	**M2E068-BF**

Phase		1~	1~	1~
Nominal voltage	VAC	230	230	230
Frequency	Hz	50	60	60
Type of data definition		fa	fa	fa
Valid for approval / standard		CE	UL 2111	CE
Speed	min^{-1}	2600	2900	2900
Power input	W	55	70	65
Current draw	A	0.25	0.30	0.29
Motor capacitor	µF	1.5	1.5	1.5
Capacitor voltage	VDB	450	450	450
Capacitor standard			UL	
Min. back pressure	Pa	0	0	0
Max. ambient temperature	°C	-	-	-
Starting current	A	0.45	0.46	0.46

ml = max. load · me = max. efficiency · fa = running at free air · cs = customer specs · cu = customer unit
Subject to alterations

AC centrifugal fan

backward curved, single inlet

Technical features

Mass	1.35 kg
Size	175 mm
Surface of rotor	Uncoated
Material of impeller	Sheet steel, hot-galvanised
Number of blades	16
Direction of rotation	Clockwise, seen on rotor
Type of protection	IP 44; Depending on installation and position
Insulation class	"F"
Humidity class	F0
Max. permissible ambient motor temp. (transp./ storage)	+ 80 °C
Min. permissible ambient motor temp. (transp./storage)	- 40 °C
Mounting position	Any
Condensate discharge holes	None
Operation mode	S1
Motor bearing	Ball bearing
Touch current acc. IEC 60990 (measuring network Fig. 4, TN system)	< 0.75 mA
Motor protection	Thermal overload protector (TOP) wired internally
Cable exit	Variable
Protection class	I (if protective earth is connected by customer)
Product conforming to standard	EN 60335-1; CE
Approval	CCC; UL 2111; CSA C22.2 Nr.77

ebm-papst Mulfingen GmbH & Co. KG · Bachmühle 2 · D-74673 Mulfingen · Phone +49 (0) 7938 81-0 · Fax +49 (0) 7938 81-110 · info1@de.ebmpapst.com · www.ebmpapst.com

AC centrifugal fan

backward curved, single inlet

Product drawing

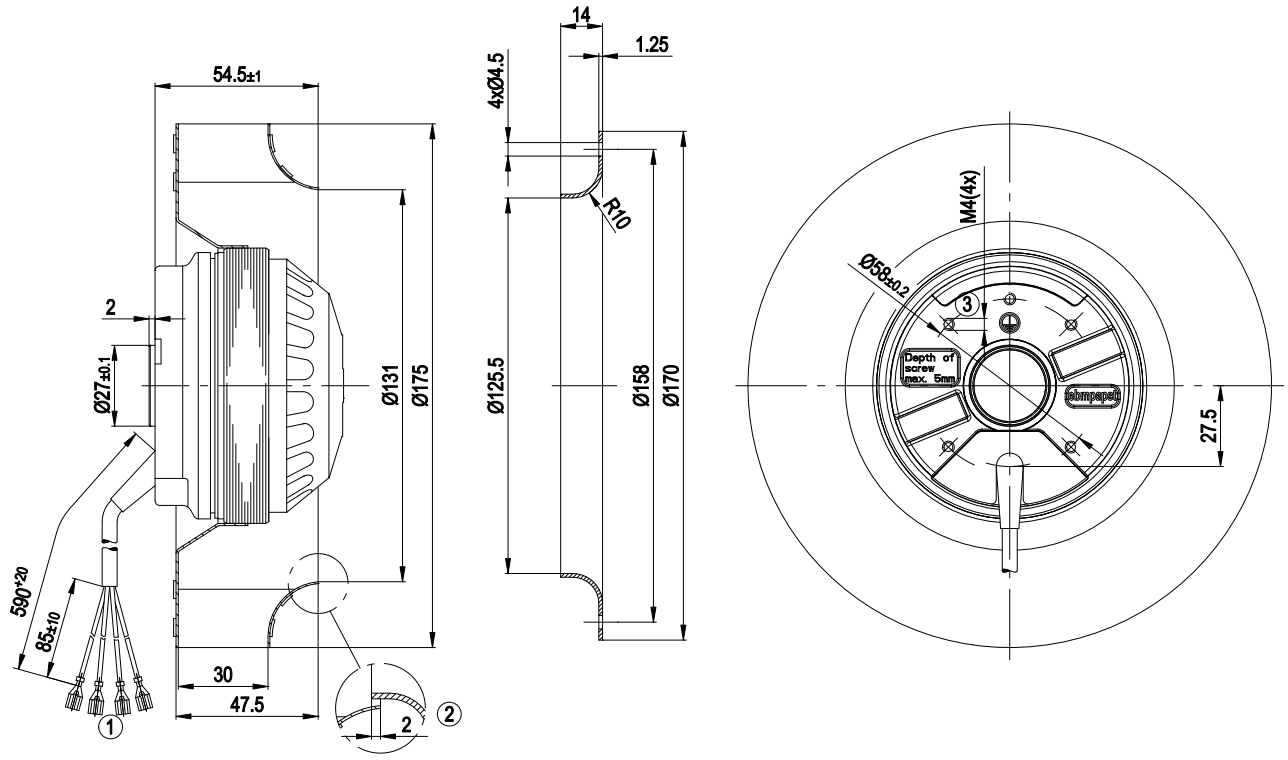

1	Connection line PFA AWG20, 4 x receptacles for tabs 6.3x0.8 crimped
2	Accessory part: Inlet nozzle 09576-2-4013, not included in the standard scope of delivery
3	Depth of screw max. 5 mm

ebm-papst Mulfingen GmbH & Co. KG · Bachmühle 2 · D-74673 Mulfingen · Phone +49 (0) 7938 81-0 · Fax +49 (0) 7938 81-110 · info1@de.ebmpapst.com · www.ebmpapst.com

AC centrifugal fan

backward curved, single inlet

Connection screen

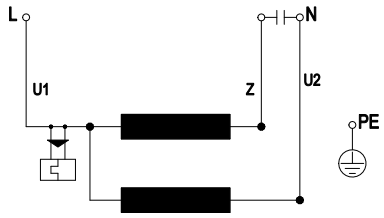

U1	blue	Z	brown	U2	black
PE	green/yellow				

ebm-papst Mulfingen GmbH & Co. KG · Bachmühle 2 · D-74673 Mulfingen · Phone +49 (0) 7938 81-0 · Fax +49 (0) 7938 81-110 · info1@de.ebmpapst.com · www.ebmpapst.com

AC centrifugal fan

backward curved, single inlet

Charts: Air flow 50 Hz

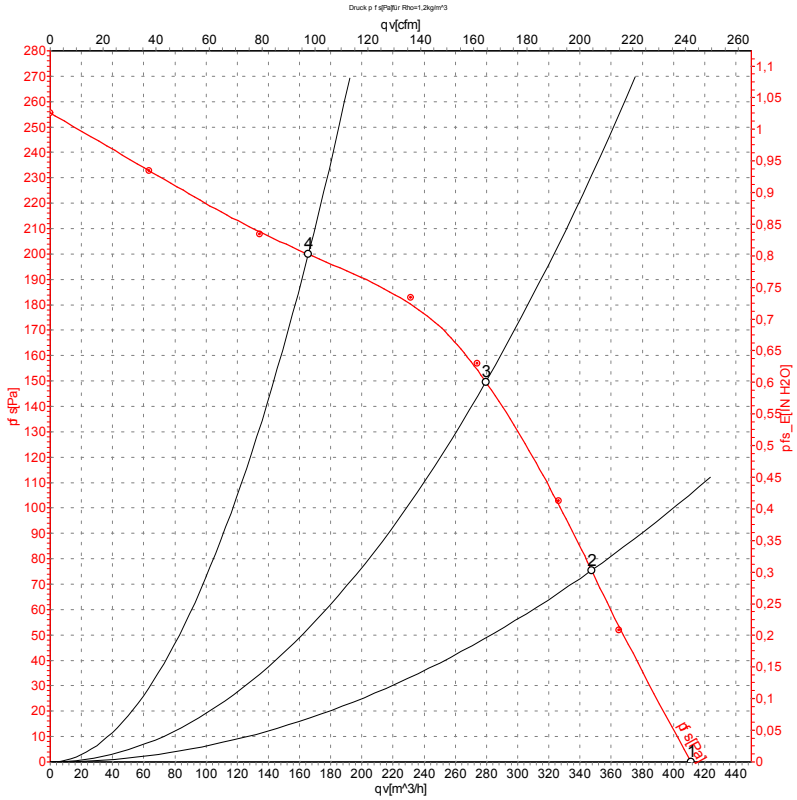

Measurement: LU-4742

Air performance measured as per ISO 5801 Installation category A. For detailed information on the measuring set-up, please contact ebm-papst. Suction-side noise levels: LwA measured as per ISO 13347 / LpA measured with 1m distance to fan axis. The values given are valid under the measuring conditions mentioned above and may vary according to the actual installation situation. With any deviation from the standard set-up, the specific values have to be checked and reviewed with the unit installed.

Measured values

	U	f	n	P_e	I	qv	p_{fs}
	V	Hz	min^{-1}	W	A	m^3/h	Pa
1	230	50	2600	55	0.25	410	0
2	230	50	2580	57	0.27	345	75
3	230	50	2570	58	0.27	280	150
4	230	50	2625	56	0.27	165	200

U = Supply voltage · f = Frequency · n = Speed · P_e = Power input · I = Current draw · qv = Air flow · p_{fs} = Pressure increase

ebm-papst Mulfingen GmbH & Co. KG · Bachmühle 2 · D-74673 Mulfingen · Phone +49 (0) 7938 81-0 · Fax +49 (0) 7938 81-110 · info1@de.ebmpapst.com · www.ebmpapst.com

AC centrifugal fan

backward curved, single inlet

Charts: Air flow 60 Hz

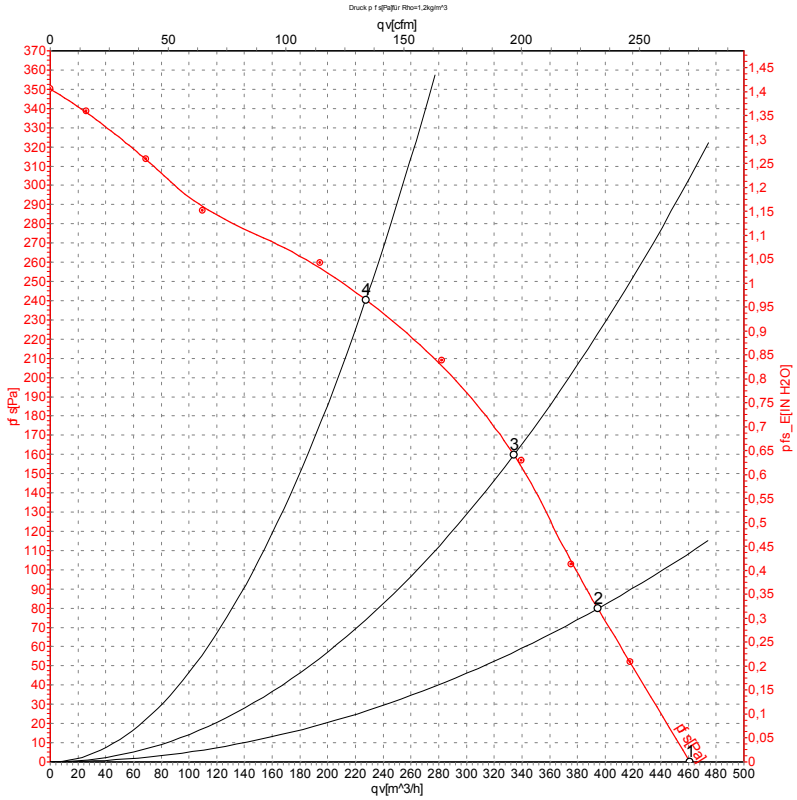

Measurement: LU-4739

Air performance measured as per ISO 5801 Installation category A. For detailed information on the measuring set-up, please contact ebm-papst. Suction-side noise levels: LwA measured as per ISO 13347 / LpA measured with 1m distance to fan axis. The values given are valid under the measuring conditions mentioned above and may vary according to the actual installation situation. With any deviation from the standard set-up, the specific values have to be checked and reviewed with the unit installed.

Measured values

	U	f	n	P_e	I	qv	p_{fs}
	V	Hz	min^{-1}	W	A	m^3/h	Pa
1	230	60	2900	65	0.29	460	0
2	230	60	2875	69	0.30	395	80
3	230	60	2855	69	0.30	335	160
4	230	60	2900	68	0.29	230	240

U = Supply voltage · f = Frequency · n = Speed · P_e = Power input · I = Current draw · qv = Air flow · p_{fs} = Pressure increase

ebm-papst Mulfingen GmbH & Co. KG · Bachmühle 2 · D-74673 Mulfingen · Phone +49 (0) 7938 81-0 · Fax +49 (0) 7938 81-110 · info1@de.ebmpapst.com · www.ebmpapst.com