DC Axial Fans

Series 4400 F 119 x 119 x 25 mm



- DC fans with electronically commutated external rotor motor. Fully integrated commutation electronics.
- With electronic protection against reverse polarity, locked rotor and overloading by PTC-resistor; partially impedance protected.
- Fan of fibreglass reinforced plastic. PBTP housing, PA impeller.
- Air exhaust over struts. Rotational direction CCW looking at rotor.
- Electrical connection via 2 leads AWG 24, TR 64. Stripped and tinned ends.
- Mass 175 g.

Nominal Data	Air Flow	Air Flow	Nominal Voltage	Voltage Range	Noise		Sintec-Sleeve Bearings / Ball Bearings	Power Input	Nominal Speed	Temperature Range	Service Life L_{10} at 40 °C at t_{max}	Curve	Specials
Type	**m³/h**	**CFM**	**V DC**	**V DC**	**dB(A)**	**Bel**	**□/■**	**Watt**	**min⁻¹**	**°C**	**Hours Hours**		
4412 FGL	94	55.3	**12**	7...14	26	3.9	□	1.3	1 600	-20...+75	80 000 / 35 000	1	/2;/39
4412 FGML	114	67.1	**12**	7...12.6	32	4.3	□	2.0	1 950	-20...+75	75 000 / 32 500	2	/2
4412 FML	114	67.1	**12**	7...12.6	32	4.3	■	2.0	1 950	-20...+75	75 000 / 32 500	2	
4412 FGM	140	82.4	**12**	7...12.6	38	4.8	□	3.2	2 400	-20...+75	70 000 / 30 000	3	/12
4412 FM	140	82.4	**12**	7...12.6	38	4.8	■	3.2	2 400	-20...+75	70 000 / 30 000	3	/2
4412 FG	170	100.1	**12**	8...12.6	43	5.3	□	5.3	2 900	-20...+60	60 000 / 37 500	4	
4412 F	170	100.1	**12**	8...12.6	43	5.3	■	5.3	2 900	-20...+60	60 000 / 37 500	4	/2
4414 FL	94	55.3	**24**	18...28	26	3.9	■	1.0	1 600	-20...+75	80 000 / 35 000	1	/2
4414 FM	140	82.4	**24**	12...28	38	4.8	■	3.2	2 400	-20...+75	70 000 / 30 000	3	/2
4414 FG	170	100.1	**24**	12...28	43	5.3	□	5.0	2 900	-20...+60	60 000 / 37 500	4	/2
4414 F	170	100.1	**24**	12...28	43	5.3	■	5.0	2 900	-20...+60	60 000 / 37 500	4	/2;/12;/39
4418 FG	170	100.1	**48**	28...53	43	5.3	□	5.5	2 900	-20...+60	60 000 / 37 500	4	
4418 F	170	100.1	**48**	28...53	43	5.3	■	5.5	2 900	-20...+60	60 000 / 37 500	4	/2;/12;/39

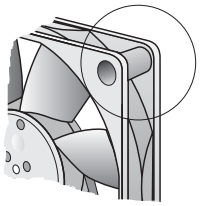

Available on request:
Fan housing with moulded-in spacers. For mounting over both flanges.

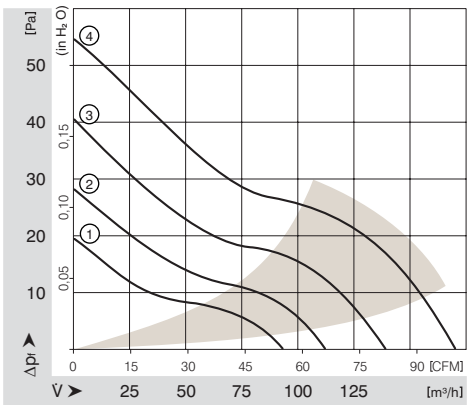

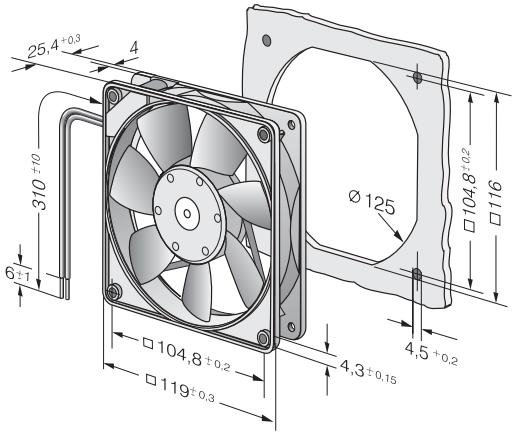

ebmpapst